DCI/VARO HTCC
Horizontal Tub Coil Cooker

DCI/VARO's atmospheric open top HTCC processing tank will dramatically improve batch cooking times and have consistent superior end-product qualities. This unit stands out as a unique modern processing tank/tub with sophisticated coil technology. The DCI/VARO HTCC is a no burn-on, batch system with complete traceability.

Side View

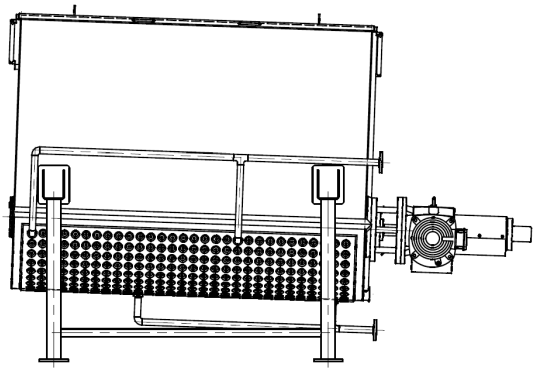

Liftable Cover

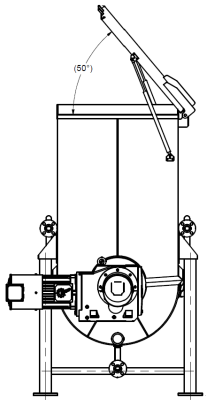

Top View

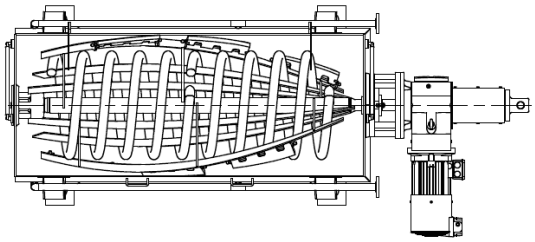

Benefits of the DCI/VARO HTCC:

- **End-Products:** Soups with solids, fruit fillings and toppings, sauces, jams, jellys, etc.
- **Design & Structure:** horizontal open tub with VARO heating/cooling coil with gentle, uniform mixing function and variable agitator speed control, and liftable cover
- **Tank Sizes:** 500L, 1200L, 2500L
- **Temperature Range:** 34° - 250° F
- **VARO Coil:** outside scrapers for inside tank wall, highly efficient stainless steel heating/cooling coil, and 100% scraping surface on tub
- **Exterior Dimple Jacket:** 1, 2 or 3 zones for improved process control
- **CIP System:** Fully automated CIP cleanable system available
- **Loading/Unloading:**
  Loading: product dumped in or transferred with pump
  Unloading: Pump?
- **Gear Motor:** --
- **Automated PLC Control System:** Allen Bradley
- **Utilities:** Steam / Cooling Water
- **Power:** 480 V, 3-phase, 60 amp
- **Certification:** ASME coded dimple jacket

Advantages of the VARO Coil Technology:

- Superior blending and mixing capability allows for uniform product quality and gently processing
- Unique agitator/coil design that heats, mixes, and cools a product
- Inner coil provides extra 80% heat transfer area to reduce process times
- Fully scraped surfaces on all heat transfer to minimize burn on

320-252-8200 | www.dciinc.com

Stay up to date with everything DCI, Inc.!

06.20.19 Rev 2